Open in Adobe Acrobat to switch to other languages.

# Setup - How to set up your Stand•Art laptop stand

ENGLISH



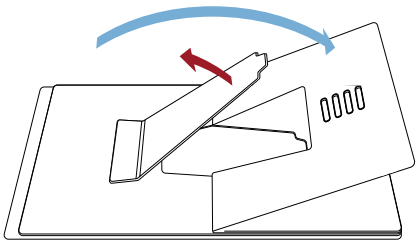

1. Unfold both rear and prop legs.

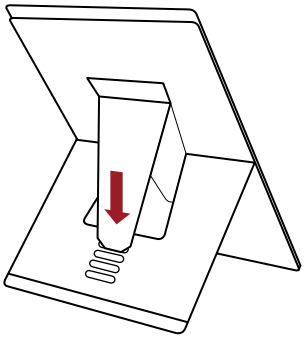

2. Position the stand upright and select one of the four angle settings.

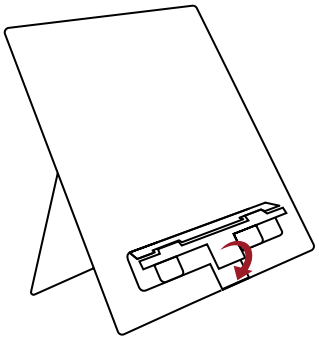

3. Bend front part of the support.

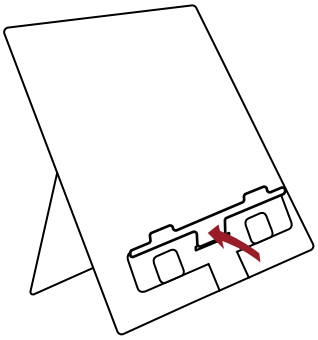

4. Introduce support tongue into the appropriate position until you hear a click sound!

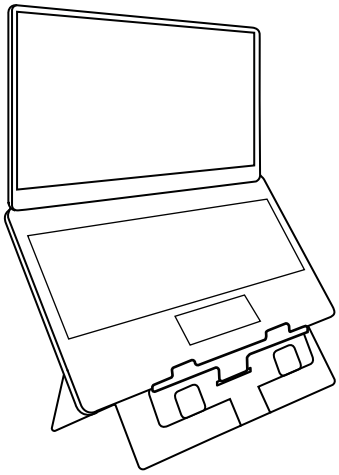

5. Place laptop on stand.

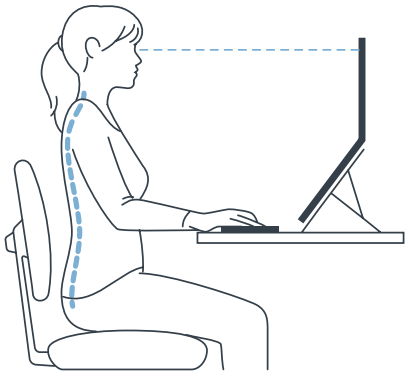

6. Position your laptop about an arm's length away. Add an external keyboard and mouse to create an ergonomic workstation.

standivarius